Sec's. 26 & 27, T. 7N, R. 4W., S.B.B.& M.

Oro Grande
Tax Code Area
9903

469-07

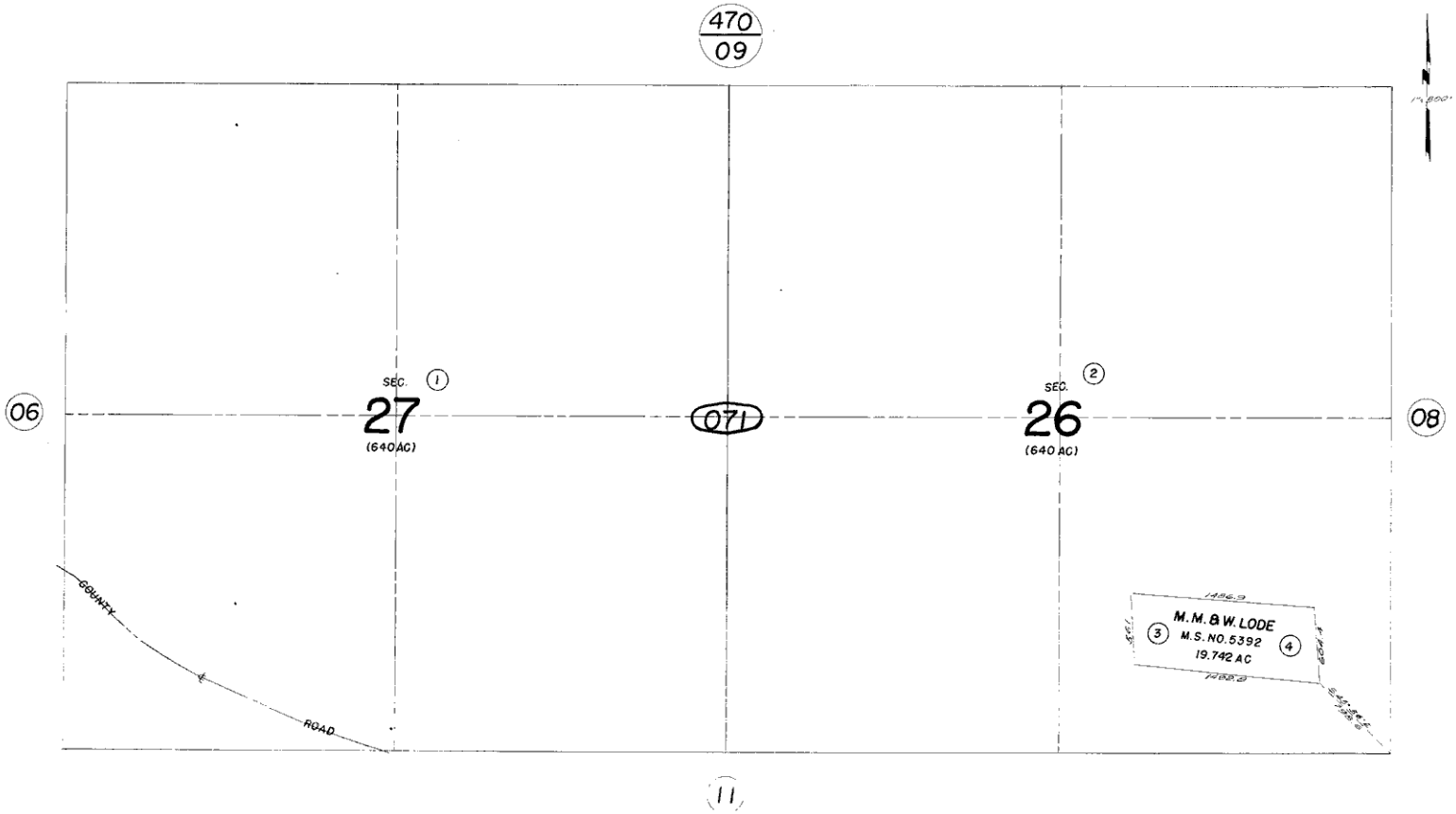

Apr. 1958

Note-Assessor's Blk. & Lot
Numbers Shown in Circles

Assessor's Map
Book 469, Page 07
San Bernardino County

REVISED
3/7/66
2-6-68