THIS MAP IS FOR THE PURPOSE OF AD VALOREM TAXATION ONLY.

S.1/2 Fractional Sec.5, T.1S.,R.12E., S.B.B.&M.

Morongo Unified
Tax Rate Area
94095

0592-19

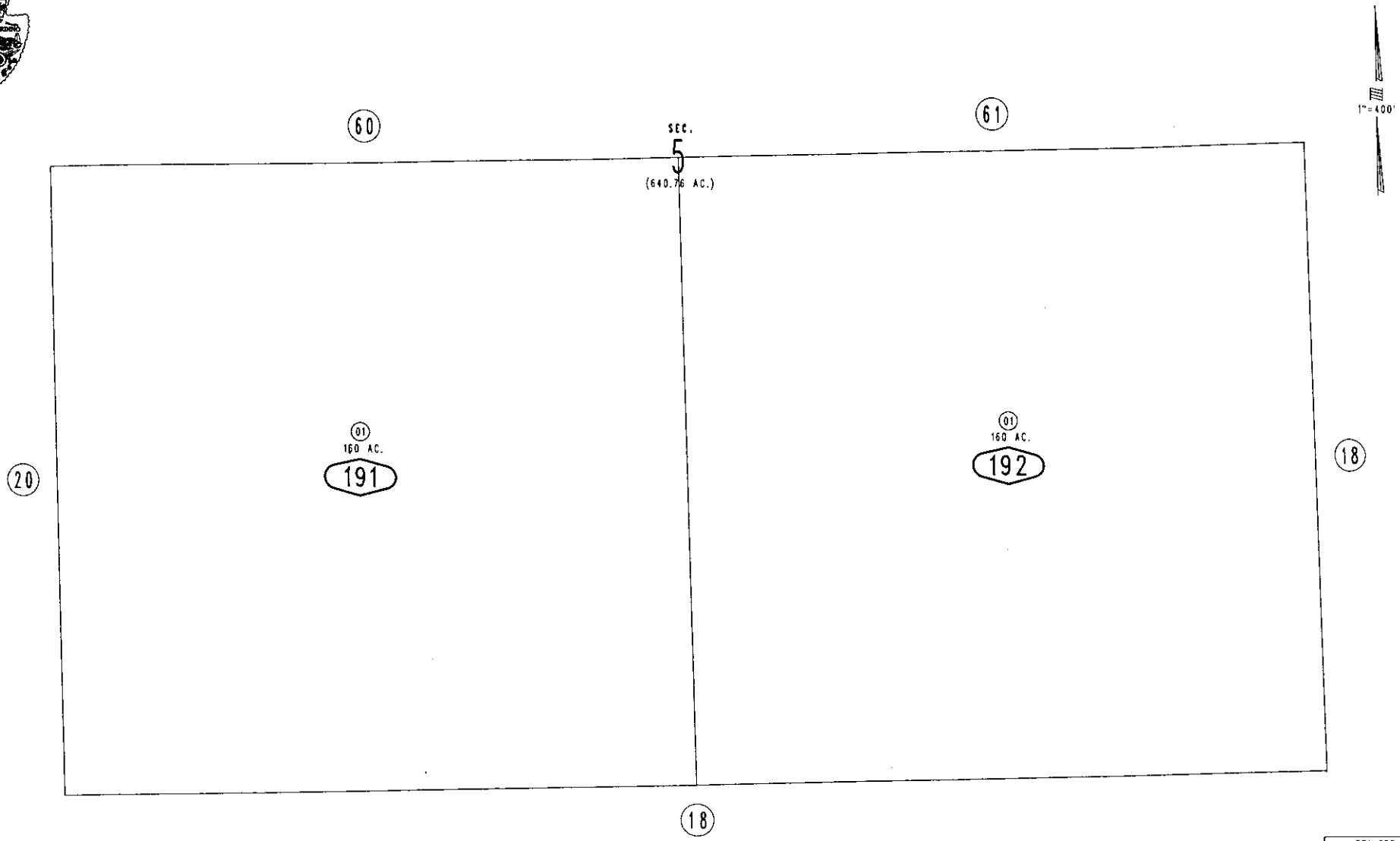

REVISED

December 2004

Assessor's Map
Book 0592 Page 19
San Bernardino County