THIS MAP IS FOR THE PURPOSE OF AD VALOREM TAXATION ONLY.

# Ptn. N.1/2, T.1N.,R.12E., S.B.B.&M.

Morongo Unified
Tax Rate Area
94055

0592 - 34

1" = 2640'

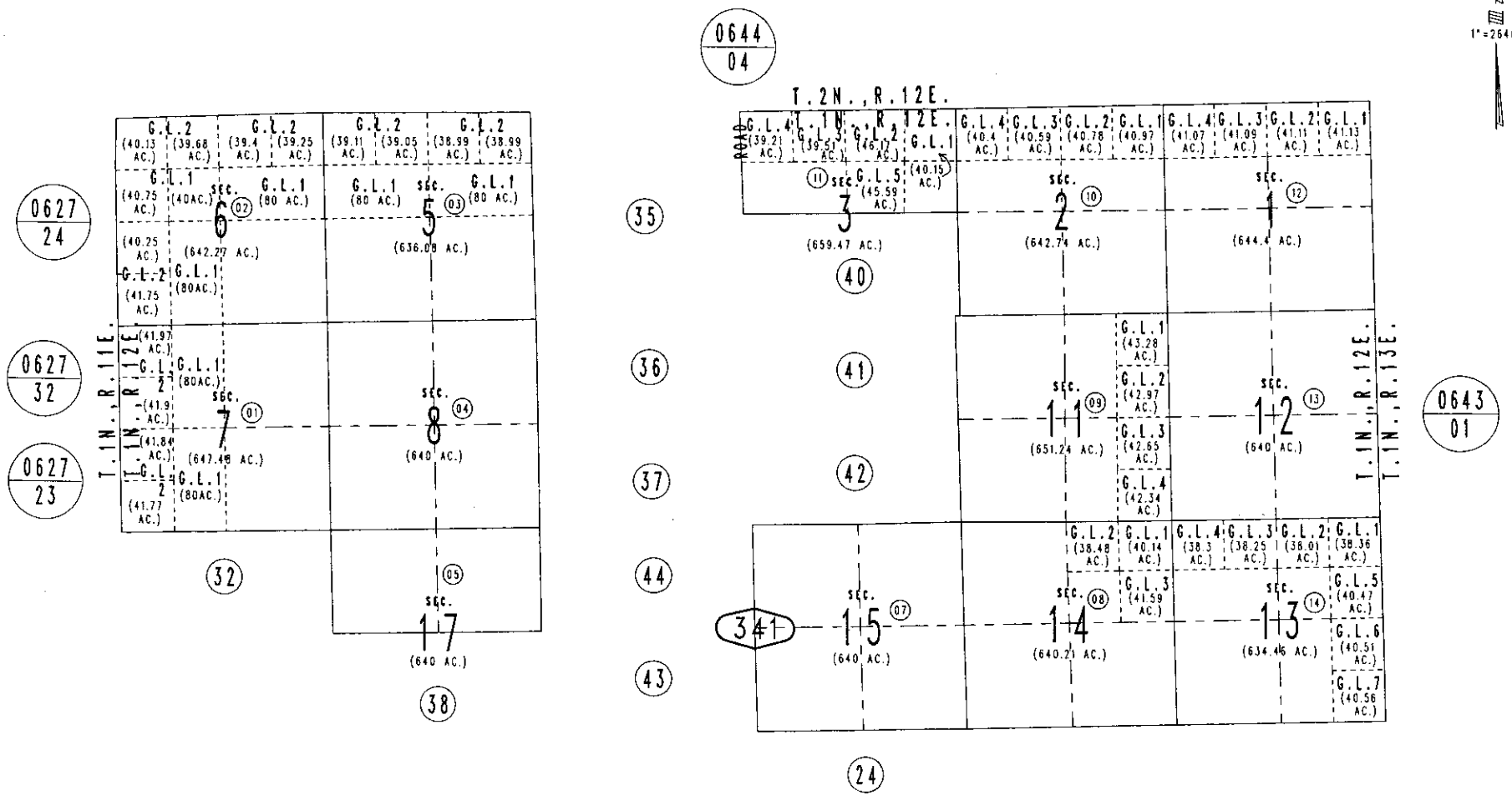


December 2004

Assessor's Map
Book 0592 Page 34
San Bernardino County

REVISED