THIS MAP IS FOR THE PURPOSE OF AD VALOREM TAXATION ONLY.

W.1/2, N.W.1/4 Sec.26, & Ptn. Sec.23, T.1N.,R.6E., S.B.B.&M.

Morongo Unified
Tax Rate Area
94004

0602-31

1"=800'

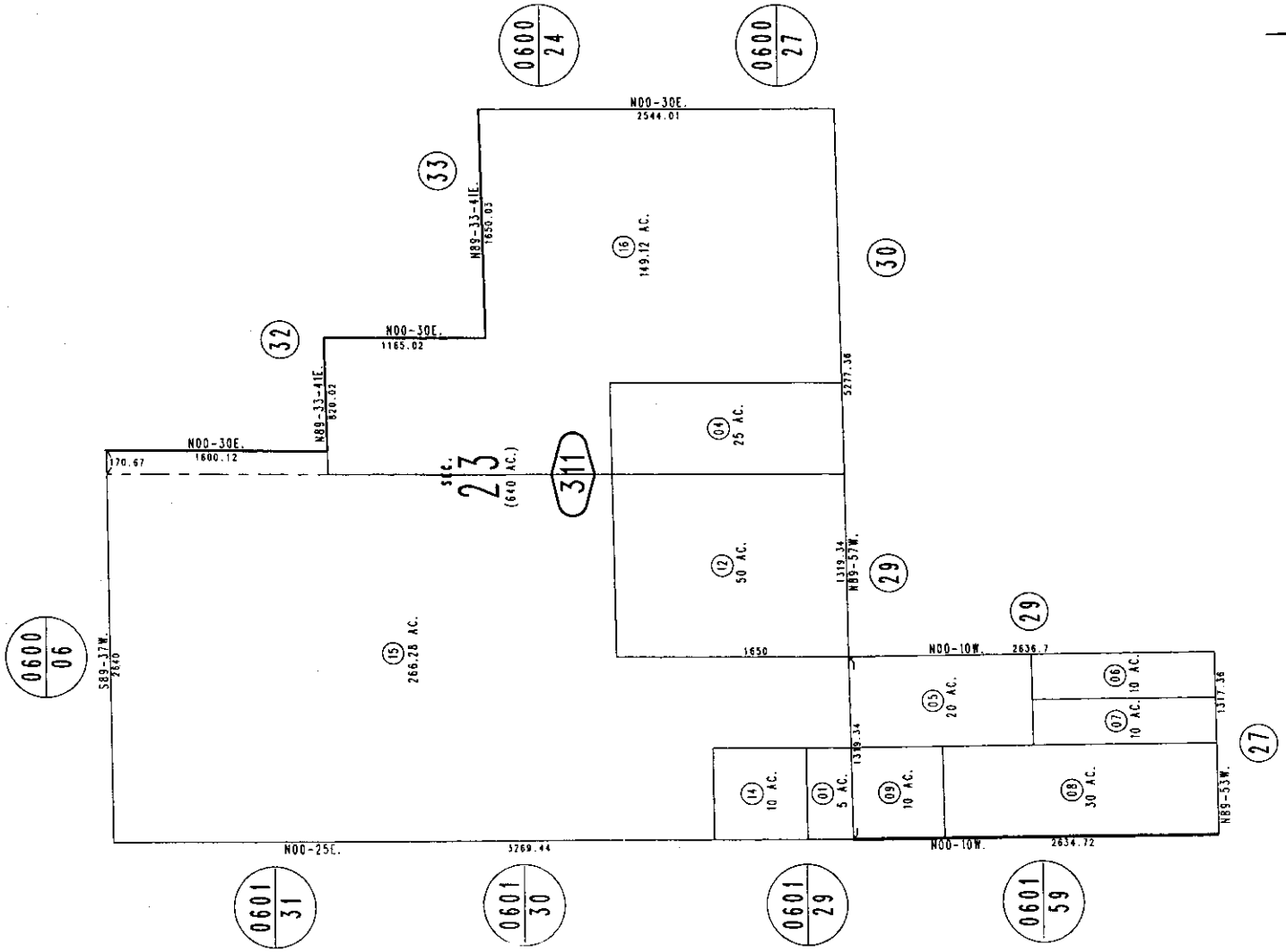

REVISED

February 2005

Assessor's Map
Book 0602 Page 31
San Bernardino County