THIS MAP IS FOR THE PURPOSE OF AD VALOREM TAXATION ONLY.

N.1/2, N.W.1/4 Fractional Sec.25, T.1N.,R.7E., S.B.B.&M.

Morongo Unified
Tax Rate Area
94004

0608 - 22

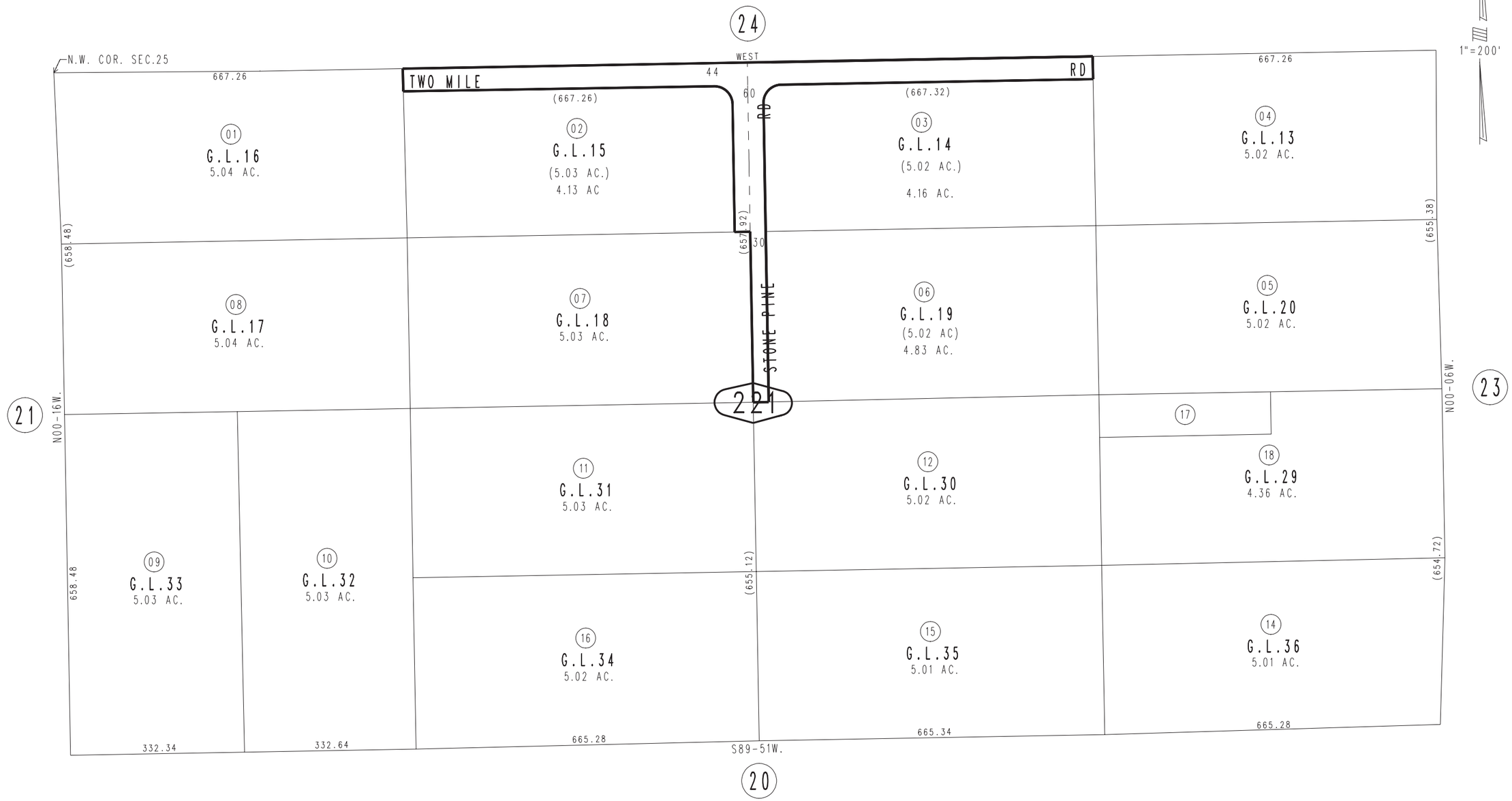

REVISED
02/21/06 GL

Assessor's Map
Book 0608 Page 22
San Bernardino County

March 2005