THIS MAP IS FOR THE PURPOSE OF AD VALOREM TAXATION ONLY.

INDEX MAP
BOOK 1044
CITY OF UPLAND

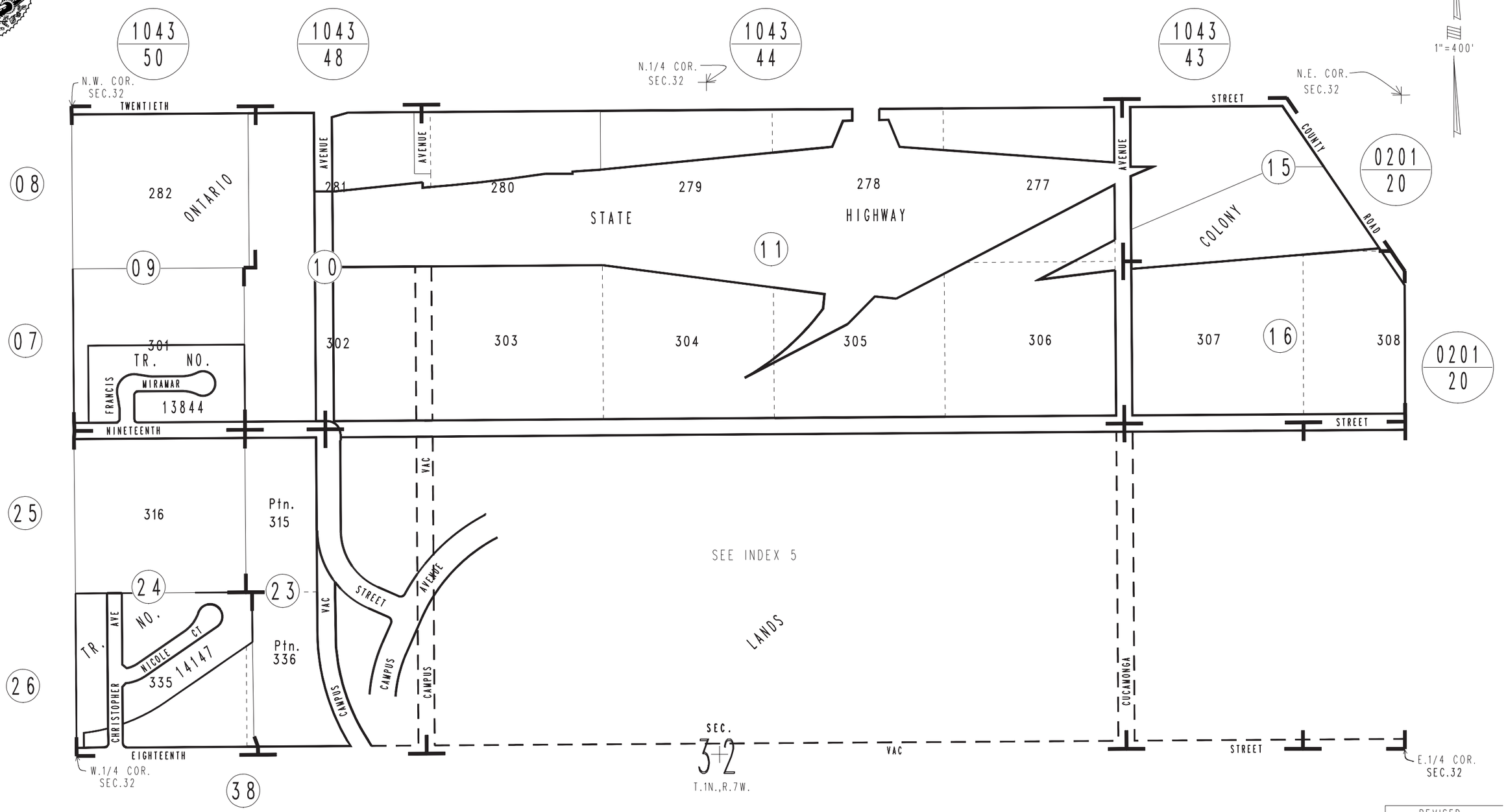

REVISED
01/22/07 GW

Assessor's Index Map
Book 1044
San Bernardino County

September 2004