THIS MAP IS FOR THE PURPOSE OF AD VALOREM TAXATION ONLY.

Ptn. Rancho Santa Ana Del Chino, M.B. 6/15

City of Ontario
Tax Rate Area
4074

1054 - 01

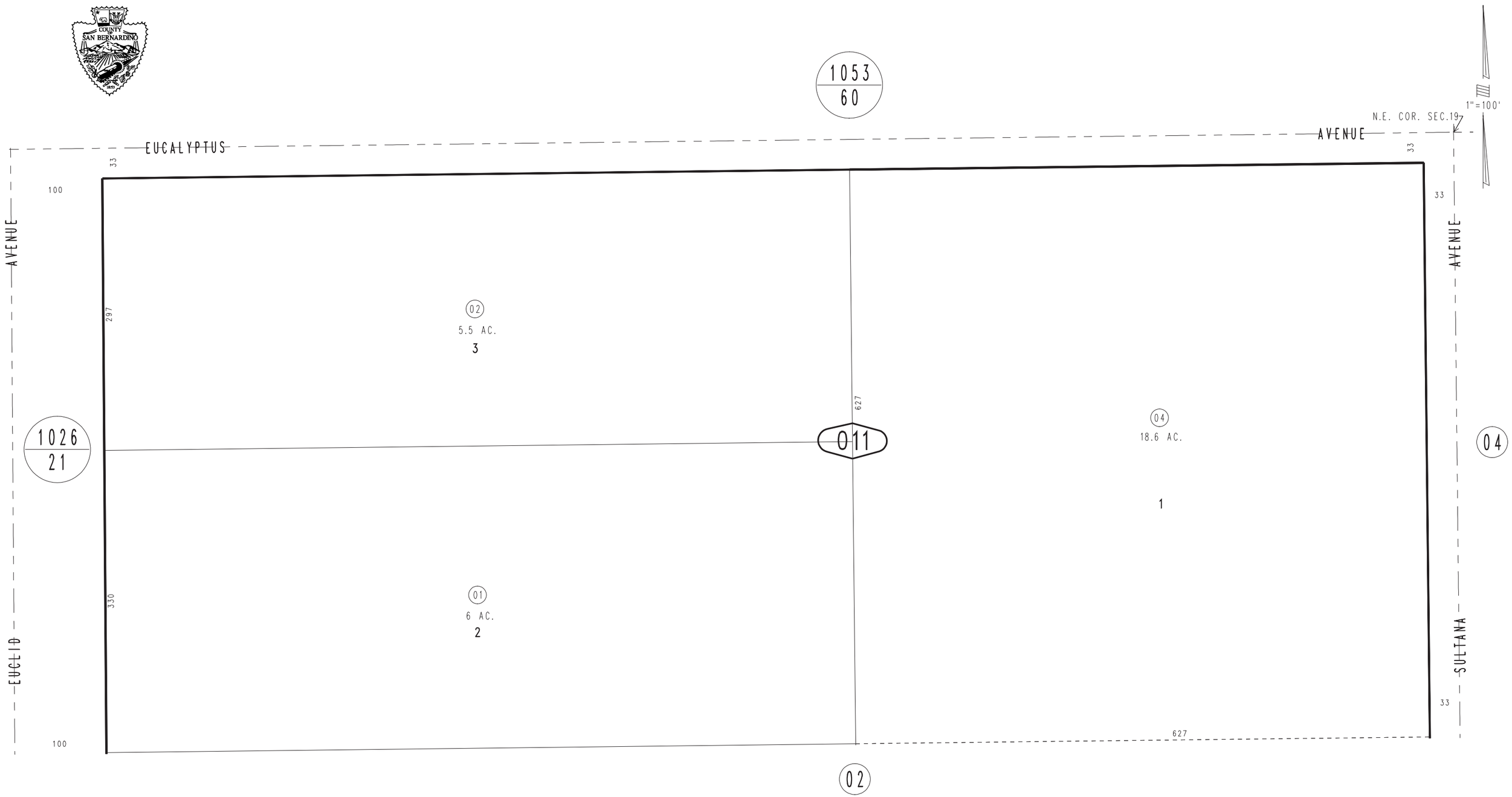

REVISED
02/23/06 KC
02/08/07 LH

October 2004

Ptn. N.E.1/4, Sec.19
T.2S.,R.7W.

Assessor's Map
Book 1054 Page 01
San Bernardino County