THIS MAP IS FOR THE PURPOSE OF AD VALOREM TAXATION ONLY.

Ptn. Tract No. 16968, M.B. 310/100-106

City of Victorville
Tax Rate Area
12053

3104 - 02

1"=200'

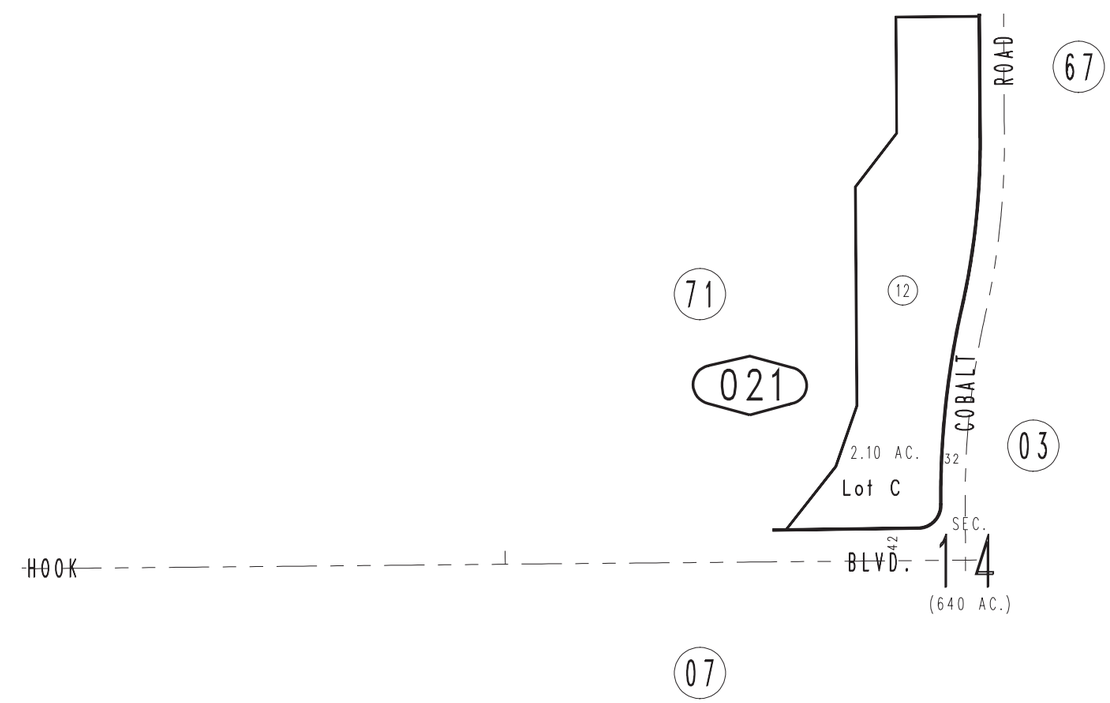

Ptn. N.W.1/4, Sec. 14
T.5N., R.5W.

Assessor's Map
Book 3104 Page 02
San Bernardino County

REVISED
05/22/06 GW
05/25/06 GW
06/15/06 GW
08/30/06 RM
02/22/07 GW
03/10/07 RU

April 1995